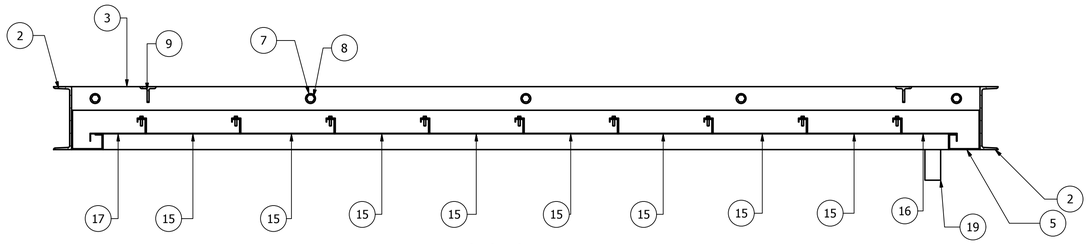

SECTION AB-AB

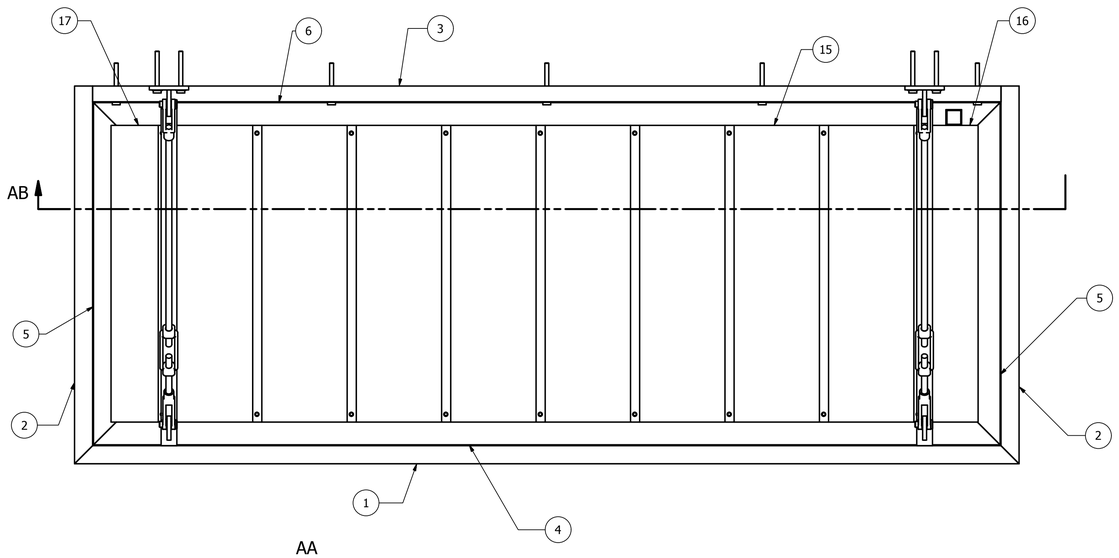

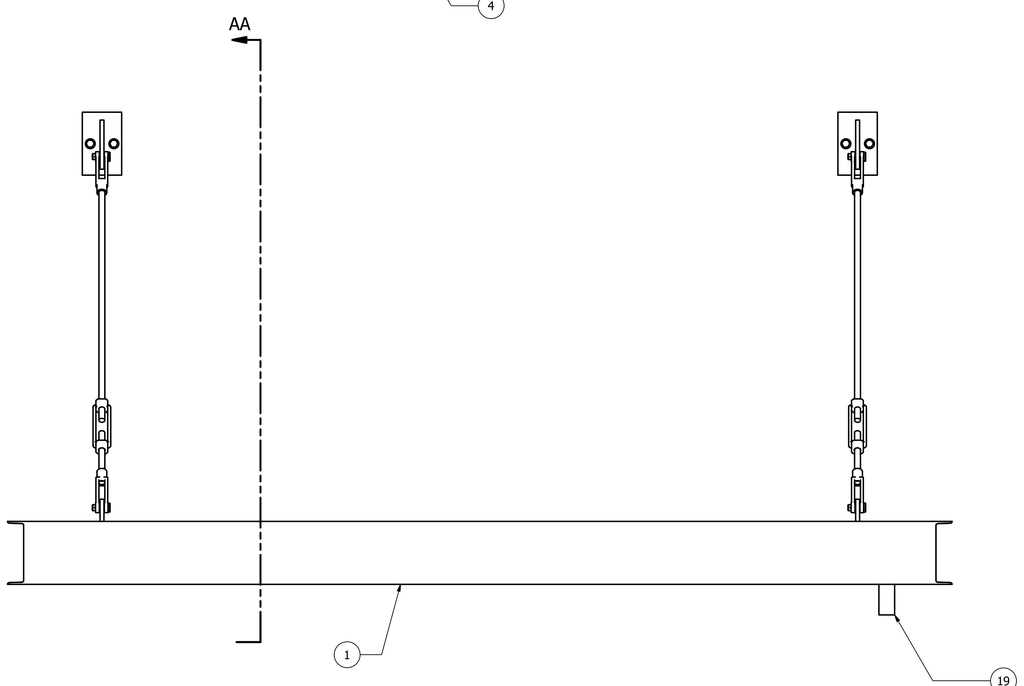

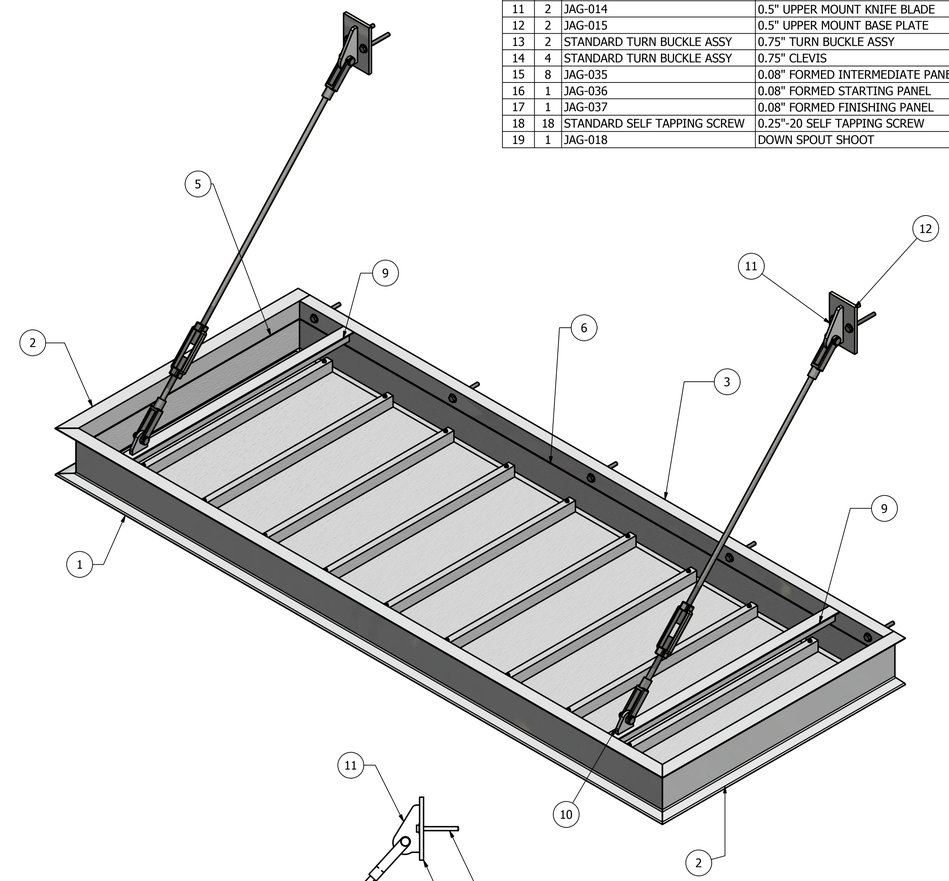

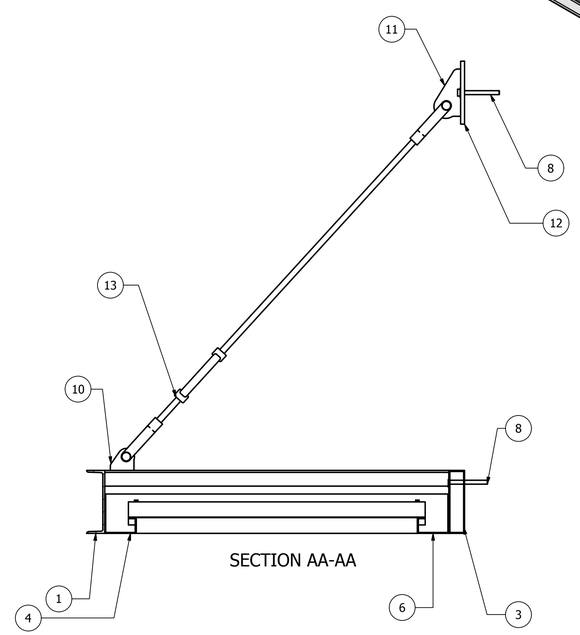

SECTION AA-AA

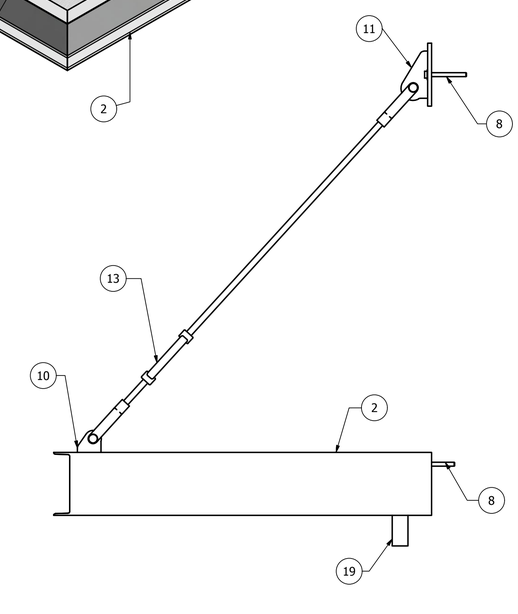

PARTS LIST

ITEM	QTY	PART NUMBER	DESCRIPTION	MATERIAL
1	1	JAG-028	8"X2.29" AMERICAN STANDARD CHANNEL	Aluminum 6061
2	2	JAG-029	8"X2.29" AMERICAN STANDARD CHANNEL	Aluminum 6061
3	1	JAG-030	2"X8"X0.125" RECTANGULAR TUBING	Aluminum 6061
4	1	JAG-031	0.125" FORMED GUTTER	Aluminum 5052
5	2	JAG-032	0.125" FORMED GUTTER	Aluminum 5052
6	1	JAG-033	0.125" FORMEDGUTTER	Aluminum 5052
7	9	STANDARD WASHER	0.5" WASHER	Steel, Galvanized
8	9	STANDARD LAG BOLT	6" LONG X 0.5" DIAM. LAG BOLT	Steel, Galvanized
9	2	JAG-034	2"X2"X0.25" TEE	Aluminum 6061
10	2	JAG-013	0.5" LOWER MOUNT	Aluminum 6061
11	2	JAG-014	0.5" UPPER MOUNT KNIFE BLADE	Aluminum 6061
12	2	JAG-015	0.5" UPPER MOUNT BASE PLATE	Aluminum 6061
13	2	STANDARD TURN BUCKLE ASSY	0.75" TURN BUCKLE ASSY	Steel, Galvanized
14	4	STANDARD TURN BUCKLE ASSY	0.75" CLEVIS	Stainless Steel
15	8	JAG-035	0.08" FORMED INTERMEDIATE PANEL	Aluminum 5052
16	1	JAG-036	0.08" FORMED STARTING PANEL	Aluminum 5052
17	1	JAG-037	0.08" FORMED FINISHING PANEL	Aluminum 5052
18	18	STANDARD SELF TAPPING SCREW	0.25"-20 SELF TAPPING SCREW	Steel, Mild
19	1	JAG-018	DOWN SPOUT SHOOT	Aluminum 6061

SHOP NOTES:

INDUSTRA-SEAM

PROJECT SITE: JAG METAL SOLUTIONS

LOCATION: 234 WEST WARRICK ST. KNIGHTSTOWN, IN

CUSTOMER: JAG METAL SOLUTIONS

PROJECT MANAGER:

DATE: 11/30/2015

CHECKED BY:

W.O.: N/A

SHEET: 6 /9

SCALE:

DWG #: JAG-006

TOLERANCE:

UNLESS OTHERWISE SPECIFIED DIMENSIONS ARE IN INCHES
TOLERANCE UNLESS NOTED:
X.X +- 0.03
X.XX +- 0.015
X.XXX +- 0.010
MAX HOLE BREAKOUT: 25% OF MATERIAL THICKNESS

DRAWN BY: WESLEY GRIM

REVISION #:

234 WEST WARRICK STREET
KNIGHTSTOWN, IN
46148
PHONE: 765-445-4459
FAX: 765-445-4456
PHONE EXT: 125

JAG METAL SOLUTIONS, INC.

We reserve the right to make improvements or changes to our specifications without notice. The information, specifications, and current, unless verified by JAG Engineering Dept., are subject to change without notice or obligation. Illustrations and information, represented thereby, are property of JAG Metal Solutions, Inc. Reproduction of all or any of this drawing or parts thereof, or use of any proprietary information, concepts and proprietary property contained herein without the written permission of JAG Metal Solutions, Inc. is prohibited.

METAL SOLUTIONS, INC.